MAGNATONE Model MP1
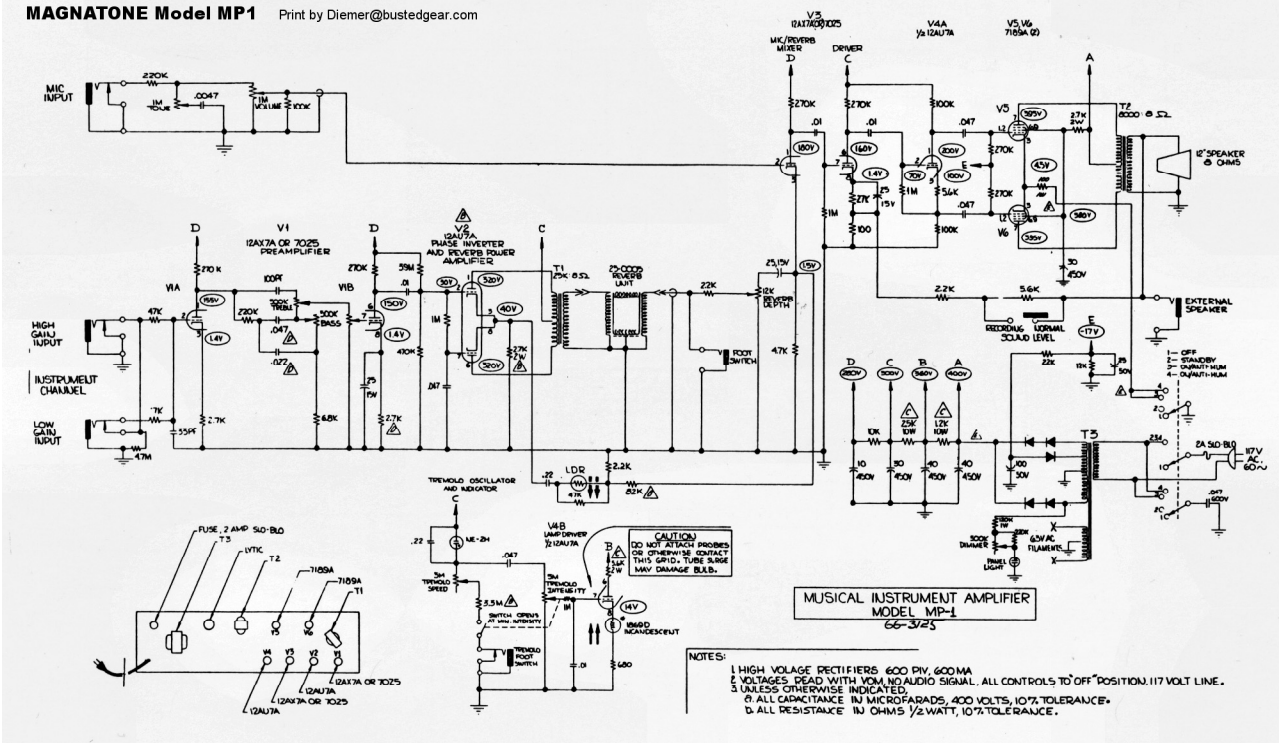
Print by Diemer@bustedgear.com