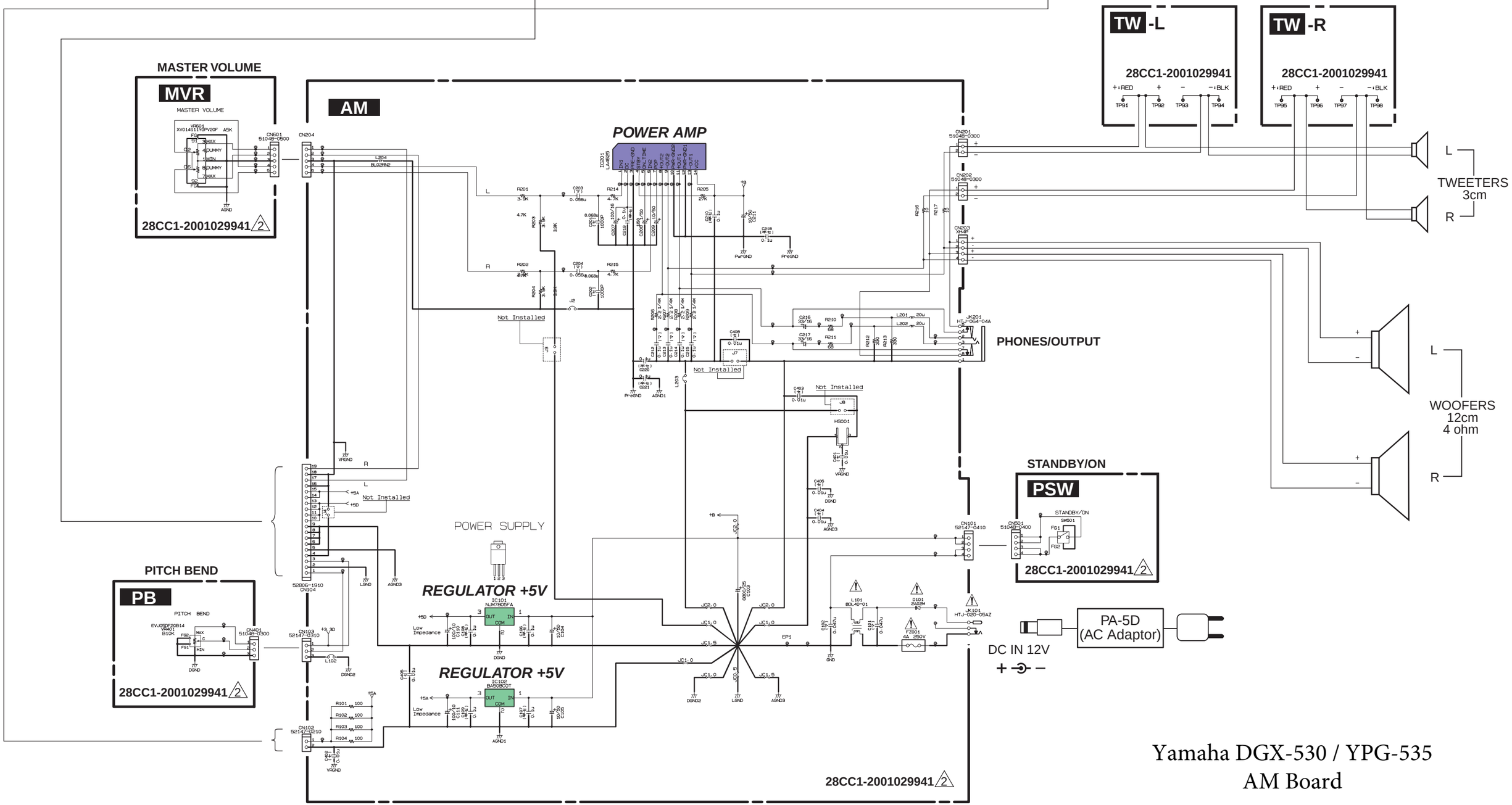

Yamaha DGX-530 / YPG-535
AM Board